X2 Single Fiber 10 km transceiver | 10G LR Ethernet

Datasheet

X2 Optical Transceiver

X2T-10G-K010B33

Product Features

- 10GBASE-LR/LW Ethernet 9dB X2
- 10 km LR X2 for SMF @ 10Gbps
- 1330Tx-1270Rx DFB+PIN Laser 10 km X2
- 0°C - 70°C Temperature - Extended/Industrial Available
- 2-Wire Interface Digital Diagnostic Monitoring (SFF-8724)
- Hot-swappable for X2 LC ports
- OptoSpan 1 year standard warranty
- Use with Finisar, Avago, JDSU & networks not requiring OEM compatibility
- X2 MSA / IEEE 802.3ae/q/k
- RoHS compliant

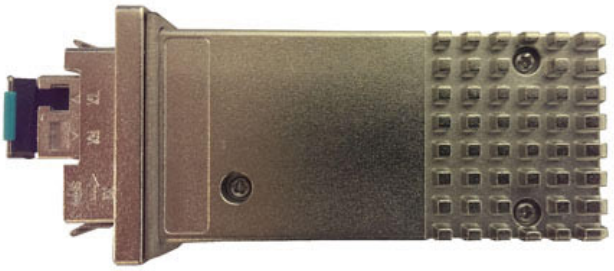

*** For OEM Compatibility, use Platinum Series Part# PX2T-10GB33K010**

Applications

- 10 Gigabit Ethernet
- 10GBASE-LR @ 10.31Gbps
- 10GBASE-LW @ 9.95Gbps
- Other Optical Links

Description

OptoSpan X2T-10G-K010B33 is a Single Fiber BiDirectional 10GBASE-LR/LW Ethernet X2 transceiver designed for long distance optical communications up to 10 km with signaling rates up to 10Gbps.

OptoSpan 10Gb Single Fiber optical transceivers are compatible with many brands such as Finisar, Avago, JDSU and network environments that do not require any special compatibility. For networks that require special OEM compatibility, such as CISCO, BROCADE, JUNIPER, ALCATEL, HP, NORTEL, EMC, QLOGIC and other OEMs, consider OptoSpan Platinum OEM Series transceiver model# PX2T-10GB33K010.

All OptoSpan long-reach X2 s are ROHS compliant, allow for real-time diagnostic monitoring as per SFF-8472 and designed to meet Multi-Source Agreement (MSA) standards for Single Fiber BiDirectional (BiDi) transceivers with LC interface.

Optical Budget Calculation for 10 km X2 Optical Transceiver

X2T-10G-K010B33	**Distance:** 10 km				**Fiber:** 1330Tx-1270Rx SMF	
	Tx Min dBm	**Tx Max dBm**	**Rx Min dBm**	**Rx Max dBm**	**Link Attenuation dB**	**Power Budget dB**
Product Specifications	**-5**	**0**	**-14**	**0.5**		
Optical Calculation Results			**-10.5**	**-5.5**	**5.5**	**9**

General Specifications

Parameter	Unit	Min.	Typ.	Max
Absolute Maximum Ratings				
Maximum Supply Voltage	V	-0.5		3.6
Storage Temperature	°C	-40		+85
Case Operating Temperature	°C	0		+70
Recommended Operating Condition				
Supply Voltage	V	3.15	3.3	3.45
Supply Current	mA			430
Data Rate	Gbps		10.3125	

Electrical Characteristics

Parameter	Unit	Min.	Typ.	Max
Transmitter				
Differential Input Voltage Swing	mVpp	150		1200
Input Differential Impedance	ohm	85	100	115
Transmit Disable Voltage - High	V	2		Vcc+0.3
Transmit Disable Voltage - Low	V	0		0.8
Transmit Fault Voltage - High	V	2		Vcc+0.3
Transmit Fault Voltage - Low	V	0		0.5
Receiver				
Differential Output Voltage Swing	mVpp	350		700
Differential Output Impedance	ohms	85	100	115
LOS Output Voltage - High	V	2		Vcc+0.3
LOS Output Voltage - Low	V	0		0.8

Optical Characteristics

Parameter	Unit	Min.	Typ.	Max
Transmitter				
Output Optical Power	dBm	-5		0
Optical Extinction Ratio	dB	3.5		
Optical Wavelength	nm	1320	1330	1340
Spectral Width	nm			1
Side Mode Suppression Ratio	dB	30		
Receiver				
Optical Center Wavelength	nm	1260		1280
Receiver Sensitivity @ 10.3125	dBm	-14		0.5
LOS DE-Assert	dBm			-18
LOS Assert	dBm	-30		

Laser Safety

This is a class 1 Laser Product according to IEC 60825-1:1993:+A1:1997+A2:2001. This product complies with 21 CFR 1040.10 and 1040 except for deviations pursuant to Laser Notice No. 50, dated July 26, 2001.

Optospan

X2 Single Fiber 10 km transceiver | 10G LR Ethernet

PIN Layout

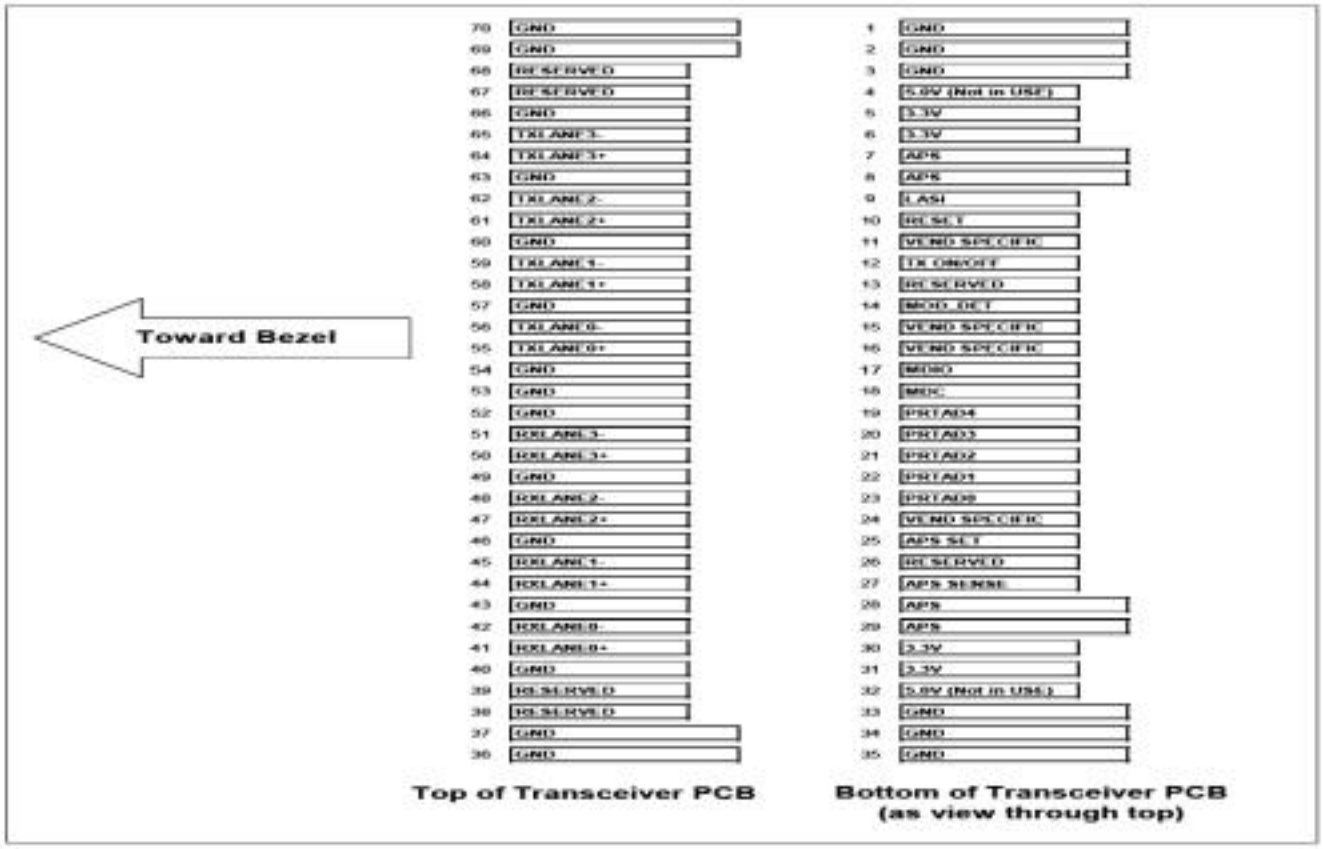

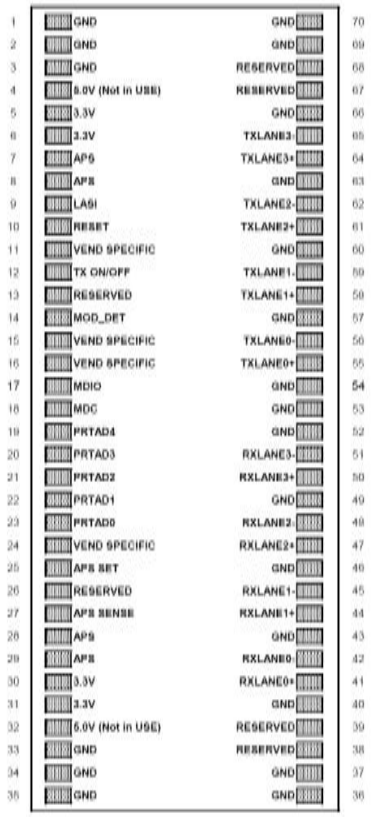

PIN Functions

Pin #	Name - Description
1	Electrical Ground
2	Electrical Ground
3	Electrical Ground
4	Power Supply of Optical Receiver Frontend
5	Power Supply of Optical Receiver and Transmitter and Control Circuits
6	Power Supply of Optical Receiver and Transmitter and Control Circuits
7	Adaptive Power Supply, Supply of PHY XS and PCS Layer Devices
8	Adaptive Power Supply, Supply of PHY XS and PCS Layer Devices
9	Link Alarm Status Interrupt, low active, Open Drain Output Supposed to operate
10	Low active Reset Input
11	Vendor Specific Pin,. for proper operation leave unconnected
12	High active Transmitter Enable Input 10kilohms pull-up on Transceiver Logic high =
13	Reserved by MSA, internally not connected
14	1kilohms to Ground for APS Circuit Environment
15	Vendor Specific Pin,. for proper operation leave unconnected
16	Vendor Specific Pin,. for proper operation leave unconnected
17	Management Data IO
18	Management Clock Input
19	Port Address Bit 4 (Low = 0), internally pulled up by 18kilohms
20	Port Address Bit 3 (Low = 0), internally pulled up by 18kilohms
21	Port Address Bit 2 (Low = 0), internally pulled up by 18kilohms
22	Port Address Bit 1 (Low = 0), internally pulled up by 18kilohms
23	Port Address Bit 0 (Low = 0), internally pulled up by 18kilohms
24	Vendor Specific Pin,. for proper operation leave unconnected
25	Feedback Input for APS, Input of APS Setting Resistor
26	Reserved for Avalanche Photodiode use, internally not connected
27	APS Sense Output for APS Control Circuit
28	Adaptive Power Supply, Supply of PHY XS and PCS Layer Devices
29	Adaptive Power Supply, Supply of PHY XS and PCS Layer Devices
30	Power Supply of Optical Receiver and Transmitter and Control Circuits

Mechanical Layouts

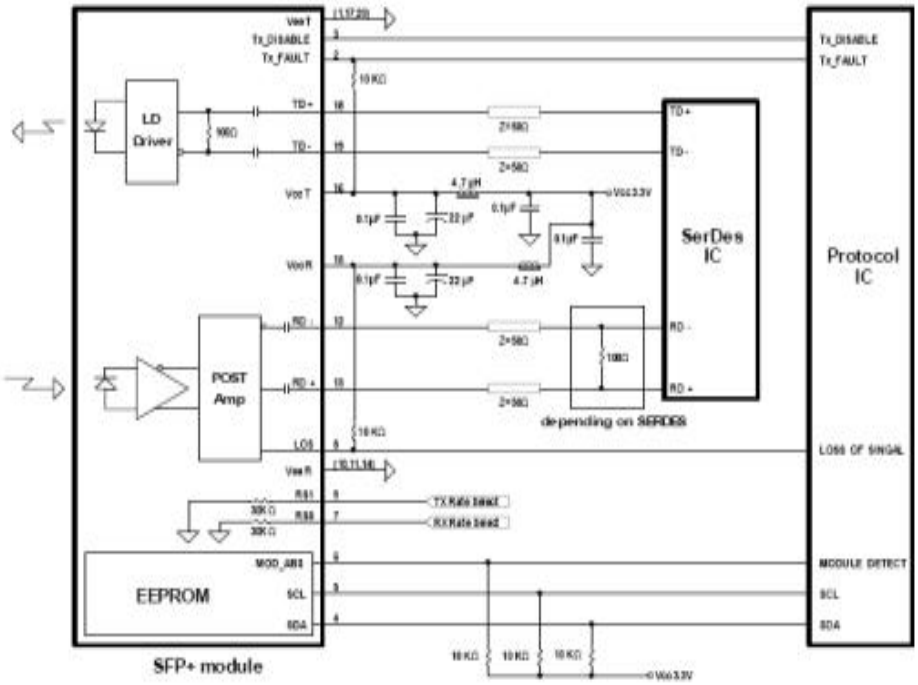

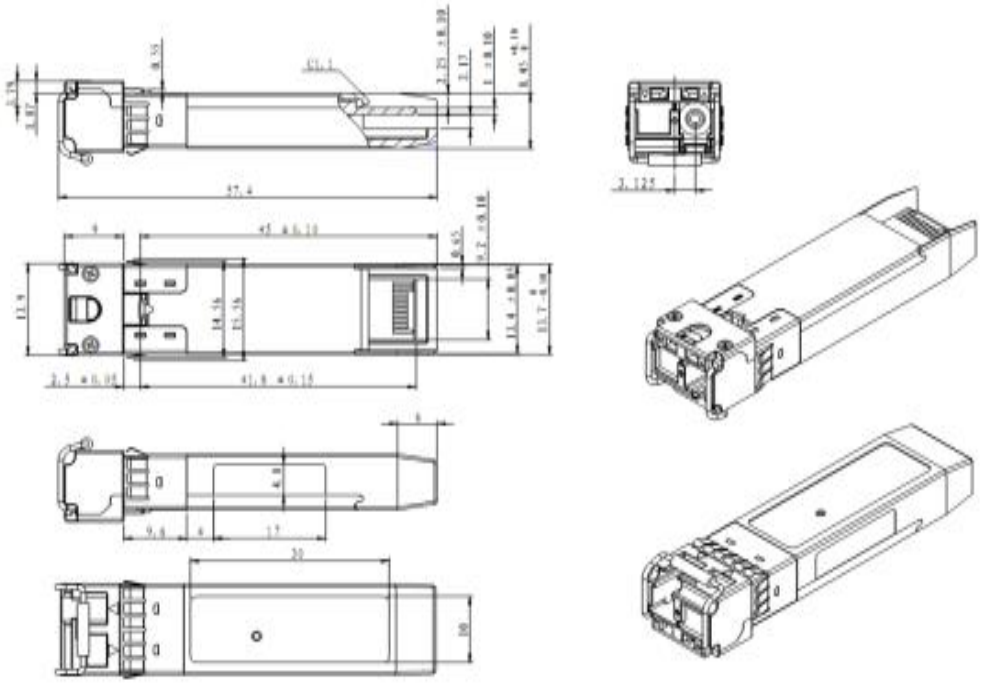

OptoSpan reserves the right to make changes or to discontinue any optical product or service without any notice. Applications and features described herein are for illustrative purposes only. OptoSpan makes no representation of warranty that such applications or features will be suitable for any specific use or compatibility without further testing or modifications. Not responsible for typographical errors.